MIT Assignment-08

Jeetu Mehra

U24AI032

Q1.Write a program to add the following data bytes stored in memory locations starting at XX60H and display the sum at the output port if the sum does not generate a carry. If a result generates a carry, stop the addition, and display 01H at the output port.

Data (H):
First Set: 37, A2, 14, 78, 97
Second Set: 12, 1B, 39, 42, 07

```
LXI H, 2660H

MVI M, 37H
INX H
MVI M, 0A2H
INX H
MVI M, 14H
INX H
MVI M, 78H
INX H
MVI M, 97H
INX H
MVI M, 12H
INX H
MVI M, 1BH
INX H
MVI M, 39H
INX H
MVI M, 42H
INX H
MVI M, 07H

; -------- ADD LOGIC --------
```

```
LXI H, 2660H
MVI B, 0AH
MVI A, 00H

LOOP: ADD M
      JC CARRY
      INX H
      DCR B
      JNZ LOOP

OUT 01H
HLT

CARRY: MVI A, 01H
       OUT 01H
       HLT
```

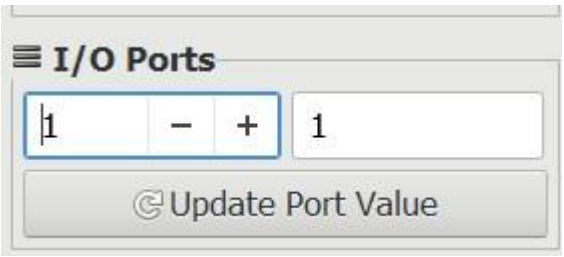

Q2.In Assignment 20, modify the program to count the number of data bytes that have been added and display the count at the second output port.

```
LXI H, 2660H

MVI M, 37H
INX H
MVI M, 0A2H
INX H
MVI M, 14H
INX H
MVI M, 78H
```

```
INX H
MVI M, 97H
INX H
MVI M, 12H
INX H
MVI M, 1BH
INX H
MVI M, 39H
INX H
MVI M, 42H
INX H
MVI M, 07H

; -------- ADD + COUNT --------
LXI H, 2660H
MVI B, 0AH
MVI A, 00H
MVI C, 00H

LOOP: ADD M
    JC CARRY
    INR C
    INX H
    DCR B
    JNZ LOOP


OUT 01H
MOV A, C
OUT 02H
HLT
```

CARRY: MVI A, 01H

OUT 01H

MOV A, C

OUT 02H

HLT

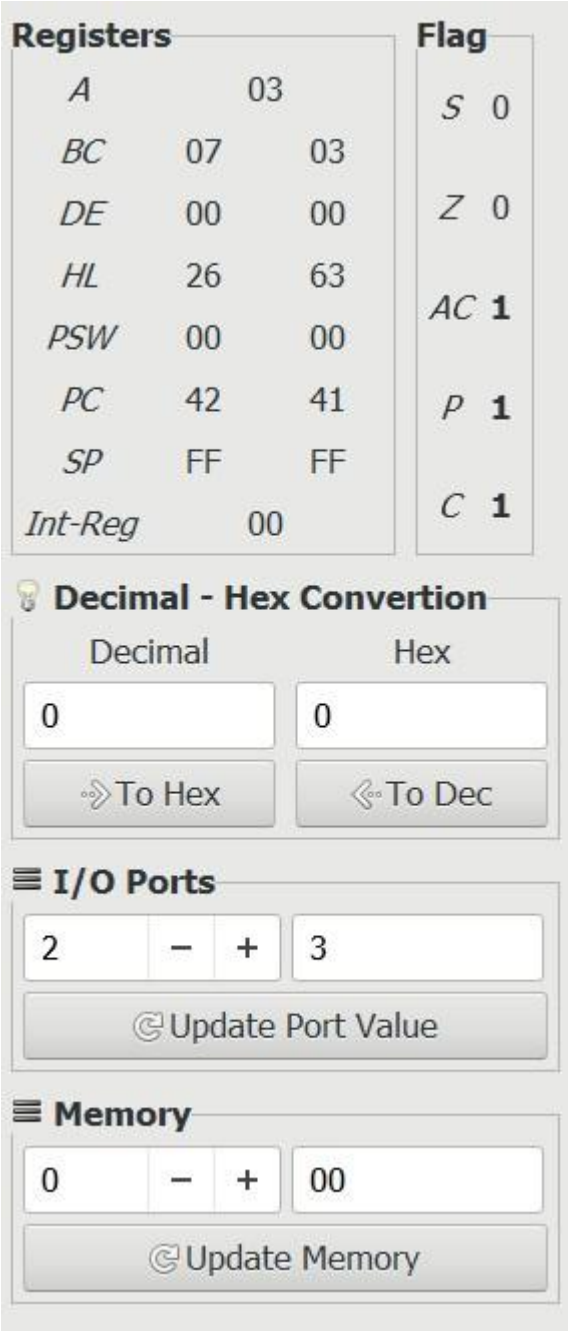

Address (Hex)	Address	Data
00	0	0
01	1	1
02	2	3

Q3.The temperatures of two furnaces are being monitored by a microcomputer. A set of five readings of the first furnace, recorded by five thermal sensors, is stored at the memory location starting at XX50H. A corresponding set of five readings from the second furnace is stored at the memory location starting at XX60H. Each reading from the first set is expected to be higher than the corresponding reading from the second set. For example, the temperature reading at location 54H (T_{54}) is expected to be higher than the temperature reading at location 64H (T_{64}). Write a program to check whether each reading from the first set is higher than the corresponding reading from the second set.

- If all readings from the first set are higher → turn ON bit D_0 of output PORT1
- If any one reading is lower → stop and output FF at PORT1 (emergency signal)

Data (H):
First Set: 82, 89, 78, 8A, 8F
Second Set: 71, 78, 79, 82, 7F

```
LXI H, 2650H

MVI M, 45H

INX H

MVI M, 50H

INX H

MVI M, 60H

INX H

MVI M, 70H

INX H

MVI M, 80H


; -------- STORE SECOND SET --------

LXI H, 2660H

MVI M, 30H

INX H

MVI M, 40H

INX H

MVI M, 55H

INX H

MVI M, 65H

INX H

MVI M, 75H
```

```
; -------- COMPARISON --------
LXI H, 2650H
LXI D, 2660H
MVI B, 05H

LOOP: MOV A, M
      MOV C, A

      LDAX D
      CMP C
      JNC FAIL

      INX H
      INX D
      DCR B
      JNZ LOOP

MVI A, 01H
OUT 01H
HLT

FAIL: MVI A, 0FFH
      OUT 01H
      HLT
```

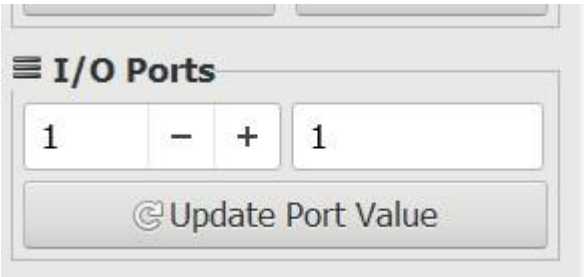

Q4.A set of eight data bytes is stored in memory locations starting from XX70H.
Write a program to subtract two bytes at a time and store the result in a sequential order in memory locations starting from XX70H.

Data (H):
F9, 38, A7, 56, 98, A2, F4, 67

```
LXI H, 2670H

MVI M, 0F9H
INX H
MVI M, 38H
INX H
MVI M, 0A7H
INX H
MVI M, 56H
INX H
MVI M, 98H
INX H
MVI M, 0A2H
INX H
MVI M, 0F4H
INX H
MVI M, 67H

; -------- SUBTRACTION --------
LXI H,2670H
LXI D,2670H
MVI C,04H
LOOP: MOV A,M
    INX H
    MOV B,M

    SUB B
```

STAX D

INX D

INX H

DCR C

JNZ LOOP

HLT

Address (Hex)	Address	Data
2670	9840	193
2671	9841	81
2672	9842	246
2673	9843	141
2674	9844	152
2675	9845	162
2676	9846	244
2677	9847	103

Q5.A set of eight data bytes is stored in the memory location starting at XX50H. Check each data byte for bits D_7 and D_0.

- If D_7 or D_0 is 1 → reject the data byte
- Otherwise → store the data bytes at memory locations starting at XX60H

Data (H):
80, 52, E8, 78, F2, 67, 35, 62

; Assume XX = 20 → so addresses are 2050H and 2060H

LXI H, 2650H ; Point to source memory

MVI A, 80H

MOV M, A

INX H

MVI A, 52H

MOV M, A

```
INX H
MVI A, 0E8H
MOV M, A
INX H

MVI A, 78H
MOV M, A
INX H

MVI A, 0F2H
MOV M, A
INX H

MVI A, 67H
MOV M, A
INX H

MVI A, 35H
MOV M, A
INX H

MVI A, 62H
MOV M, A

LXI H, 2650H     ; Source pointer
LXI D, 2660H     ; Destination pointer
MVI C, 08H       ; Counter

LOOP: MOV A, M        ; Load data byte

    ANI 81H         ; Check D7 and D0
    JNZ SKIP        ; If either is 1 → reject       MOV A, M        ; Reload original data
```

```
    STAX D        ; Store at destination
    INX D         ; Increment destination pointer

SKIP: INX H       ; Next source byte
    DCR C
    JNZ LOOP

HLT
```

Address (Hex)	Address	Data
2650	9808	128
2651	9809	82
2652	9810	232
2653	9811	120
2654	9812	242
2655	9813	103
2656	9814	53
2657	9815	98

Q6.A microcomputer is designed to control various appliances and lights in your house.
The system has an output port with address 01H, and various units are connected to bits D_7 to D_0.

On a cool morning you want to turn ON:

- Radio
- Coffeepot
- Space heater

Write appropriate instructions for the microcomputer. Assume
R/W memory begins at 2000H.

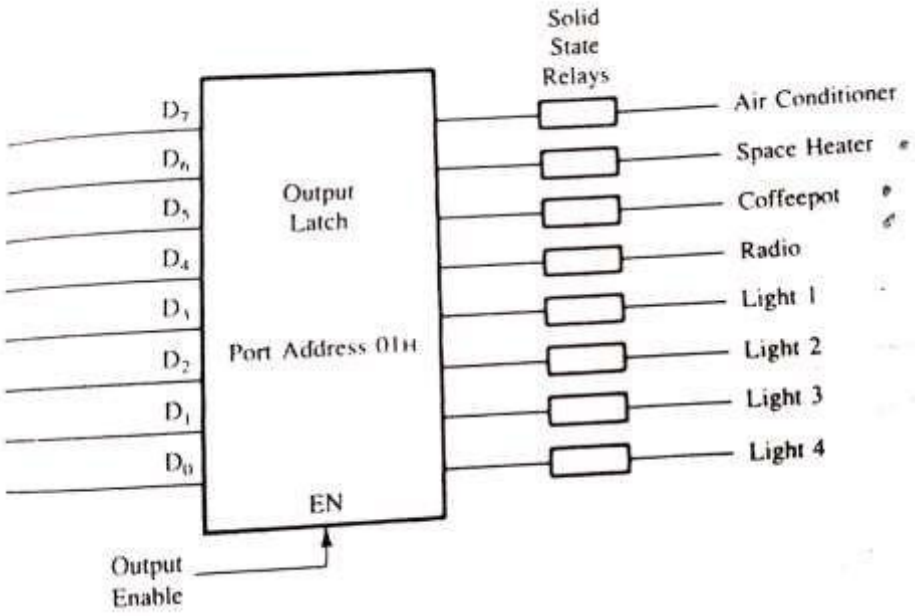

LXI SP, 2099H ; Initialize Stack Pointer

MVI A, 70H ; Load 70H (Radio + Coffeepot + Space Heater ON)

OUT 01H ; Send to Output Port 01H

HLT ; Stop

An additional input port with eight switches and address 01H is connected to the microcomputer to control the same appliances and lights from both bedroom and kitchen.

Write instructions to turn ON devices from any of the input ports.

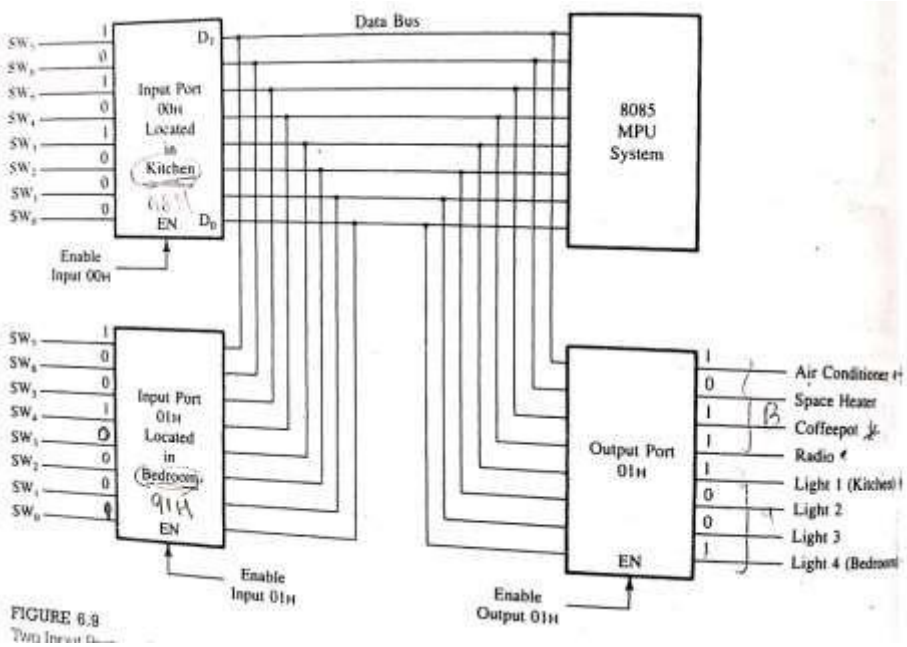

FIGURE 6.9

```
LXI SP, 2099H   ; Initialize Stack Pointer

IN 00H          ; Read Kitchen Input Port (00H) into Accumulator
MOV B, A        ; Save kitchen input in register B

IN 01H          ; Read Bedroom Input Port (01H) into Accumulator
ORA B           ; OR bedroom with kitchen inputs
                ; (device ON if either port requests it)

OUT 01H         ; Send combined result to Output Port 01H
HLT             ; Stop
```

Explanation of Logic

```
Kitchen  (00H): 1 0 1 0 0 1 0 1  → A5H
```

Bedroom (01H): 1 0 0 1 0 0 0 1 → 91H

OR Result : 1 0 1 1 0 1 0 1 → B5H

↑ ↑↑

A/C Coffepot+Radio ON from either room

Q7.If the switch S_7 of input PORT0 (connected to data line D_7) is at logic 1 and all other switches are at logic 0, specify the contents of the accumulator when the instruction IN PORT0 is executed.

```
MVI A, 9FH
IN PORT0
MOV B, A
OUT PORT1
HLT
```

Accumulator (A) = 80H Explanation:
Only switch S7 is ON, so D7 = 1 and all other bits are 0.
So input from PORT0 = 10000000 = 80H.
When IN PORT0 is executed, accumulator gets this value. Hence
A = 80H.

Q8.Specify the output at PORT1 and the contents of register B after executing the instructions in Assignment 6.

PORT1 = 80H
Register B = 80H Explanation:
From Q6, input from PORT0 = 80H (only D7 = 1).
IN PORT0 loads A = 80H.
MOV B, A copies A to B, so B = 80H.
OUT PORT1 sends A to PORT1, so PORT1 = 80H.